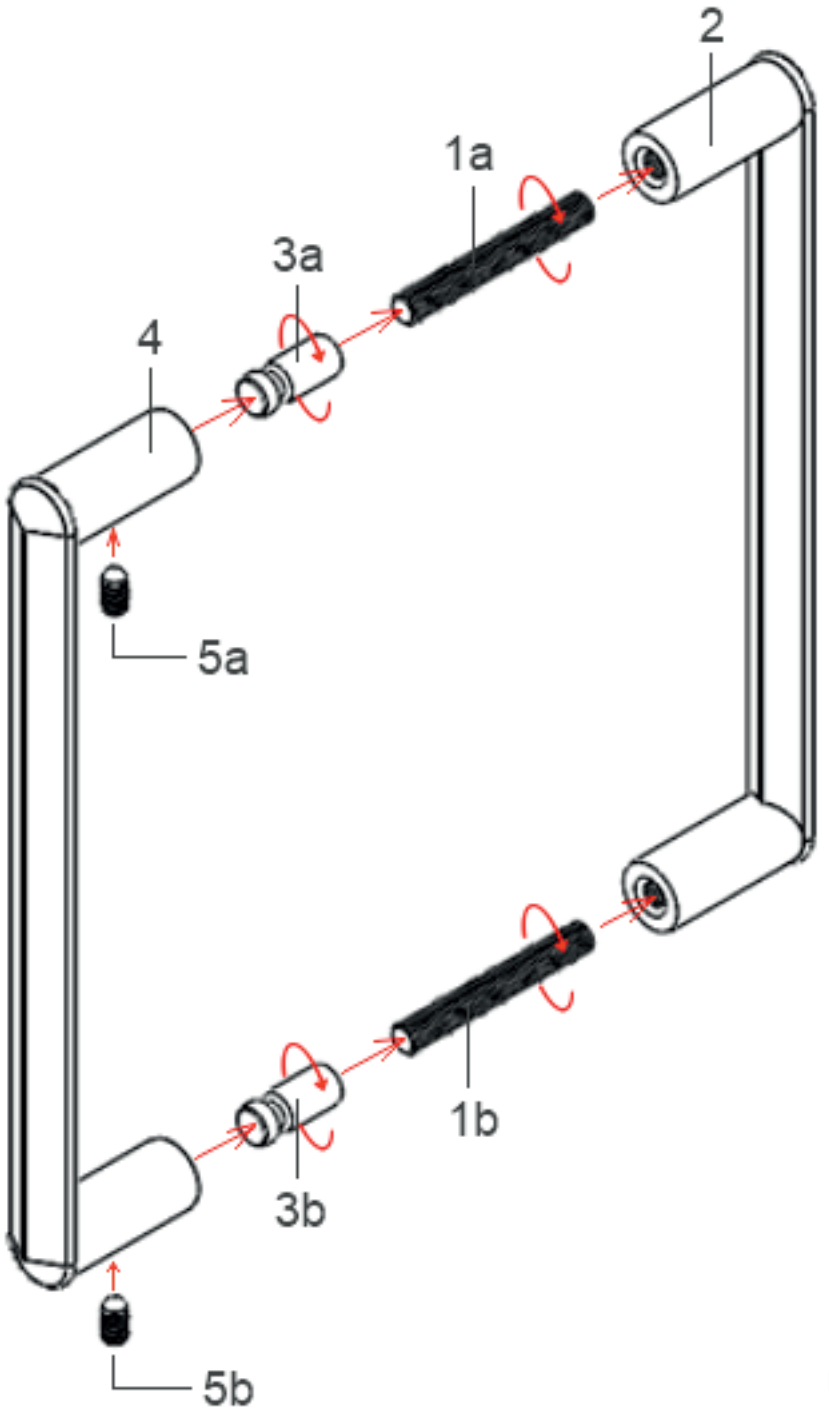

Quincalux