Quincalux

Athena Collection - Hotel privacy lock

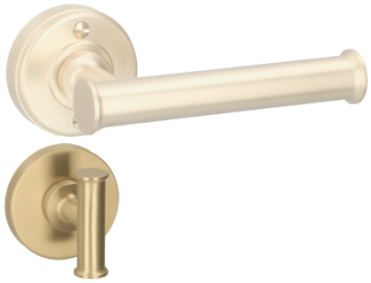

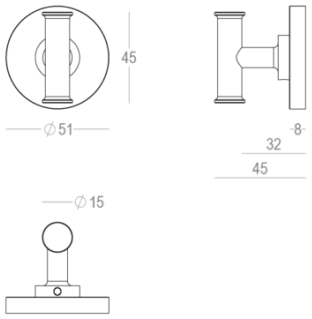

Product information

Collection	Athena
Type	Hotel privacy lock
Reference	198-HP-22-11-PR/167
Finish	Satin brass (22)
Material	Brass
Use	Indoor
length	45 mm
Width	15 mm
Height	45 mm
Drilling distance	38 mm
Compatibility and certification	Salto (ANSI) & Vingcard
Production	Handmade in Belgium

Kouterstraat 7, B-8560 Wevelgem, Belgium
info@quincalux.com