Quincalux

082 Collection - Door handles



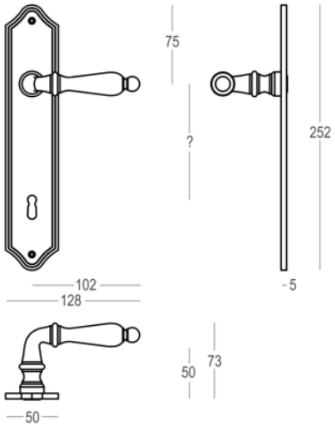

Product information

Collection	082
Type	Door handles
Reference	082-00-41-22
Finish	Matt brushed bronze (41)
Unity	Pair
Material	Brass
length	252 mm
Width	128 mm
Height	72 mm
Drilling distance	?
Weight	595 gr
Production	Handmade in Belgium

Kouterstraat 7, B-8560 Wevelgem, Belgium
info@quincalux.com